IJRTBT

IMPACT OF DESTINATION IMAGE FACTORS ON REVISIT INTENTIONS OF HOTEL'S INTERNATIONAL TOURISTS IN BA RIA-VUNG TAU (BR-VT) THE MEDIATING ROLE OF POSITIVE WORD OF MOUTH

Nguyen Vu Hieu Trung[1]*, Gamal S. A. Khalifa[2]

[1]Faculty of Business & Accountancy, Lincoln University College, Malaysia

[2]Faculty of Hospitality and Tourism, Lincoln University College, Malaysia & Faculty of Tourism and Hotels Fayoum University, Egypt

**Corresponding Author's Email: hieutrung0704@gmail.com*

ABSTRACT

This study aims to measure the effect of destination image on intention to revisit and positive word-of-mouth of hotel's international tourists at BR-VT destination. The research surveyed 356 international tourists visiting BR-VT. Smart PLS3 software was used to analyze data. The result support all study hypotheses. In addition, WOM significantly mediate the relationship between destination image factors and re-visit intentions.

Keywords: Destination Image, Word-of-Mouth, Re-visit Intentions, Hotels, BR-VT

INTRODUCTION

Tourism is considered as one of the world's largest service industries and will continue to be as one of the main sources of foreign revenue for countries involved in tourism (Blanke & Chiesa, 2013). As of 2013, it is recorded that 9% of the world GDP comes from tourism, whereby 1 out of 11 jobs is from the tourism industry (World Tourism Organization, 2014). It was reported that, total 1.87 billion tourists have travelled to various locations in 2013 which has generated a total of USD 6 trillion of revenue (Blanke & Chiesa, 2013). The number of international tourists' arrival in Asia and Pacific was 248.1 million which accumulates total 22.8% of the total international tourists in the world. Asia was ranked second after Europe as the most visited destination in the World in 2013 (World Tourism Organization, 2014). It has further forecasted that this trend will continue to grow in the coming years (Andrades & Dimanche, 2017; Högström, Rosner & Gustafsson, 2010).

In the strong development trend of tourism in the world, Vietnam is also promoting all potentials to develop its tourism. With preferences on natural, cultural and social conditions, Vietnam has many prospects to attract international tourists. Ba Ria-Vung Tau in the Southeast region, in the southern key economic region of Vietnam is located on a trans-Asia road, with a system of seaports, airports and convenient river networks. Marine and coastal ecosystems are quite unique and diverse: they are suitable for many types of ocean exploration tourism, convalescence and medical tourism for tourists, cultural and historical tourism - Spirituality, MICE tourism, ecotourism, etc., and they are also convenient in forming complex international resorts (Nhu, Khang & Thảo, 2014). BR-VT's socio-economic strategy has determined that tourism is a key economic sector. In recent years, the number of visitors to BR-VT has been increasing; however, international visitors are only a very small number compared with the number of domestic tourists. So the question for the provincial tourism managers is how to increase international visitors to BR-VT in the future? (Nhu, Khang & Thảo, 2014).

Some local and foreign studies showed that the intentional return and positive word-of-mouth transmission have a huge impact on attracting tourists (Abd-Elaziz *et al.*, 2015; Khalifa, 2015, 2018; Marinao, Vilches-Montero & Chasco, 2015; Nhu, Khang & Thảo, 2014; Qoura & Khalifa, 2016; Som *et al.*, 2012; Sudigdo, Khalifa & Abuelhassan, 2019; Tựu & Cẩm, 2012). Other studies also showed that one of the most significant and powerful factors that influence visitors' intentional return and positive word-of-mouth is the destination image factor (Abd-Elaziz *et al.*, 2015; Qu, Kim & Im, 2011; Sudigdo, Khalifa & Abuelhassan, 2019; Tavitiyaman & Qu, 2013). From the theoretical and practical issues mentioned, it's necessary to study impact of destination image factors (Sudigdo, Khalifa &

Abuelhassan, 2019) on intentional return and positive word-of-mouth transmission of international tourists in BR-VT.

LITERATURE REVIEW

1. Theoretical Basis

(A) Destination Image

Destination image is a theory that many researchers are interested in and give different definitions (Sudigdo, Khalifa & Abuelhassan, 2019). However, these definitions do not rely on a specific marker; a definition can be based on manners or based on overall components or both (Khuong & Phuong, 2017). Upadhyaya (2012) defined "Destination image is the perception of visitors about a potential place". According to Gallarza, Saura & García (2002) "Destination images are the impressions that a person has in her mind about a place where she is not there". According to Gitelson & Crompton (1984) "Destination image is totally belief, concept, impression that a person has for a destination." Andrades & Dimanche (2017) considered that, "Destination image includes all the knowledge of objective, impression, prejudice, imagination, emotional thinking of a person or group of people about a special place". Echtner & Ritchie (1993) defined "Destination image is an awareness of a person and overall impression of that person of a destination in his mind." This definition indicates functional characteristics related to tangible aspects and psychological characteristics related to intangible aspects.

The components of the destination image are shown in the destination image model of Echtner and Ritchie, (1993). Under this model, all qualities and overall images can be based on the functional characteristics or psychological characteristics about the product (Alkhateri *et al.*, 2018; Mohamed *et al.,* 2018; Nusari *et al.*, 2018; Shamsi *et al.*, 2018; Sudigdo *et al.*, 2019). Functional characteristics (including prices, transport infrastructure, accommodation) related to the tangible aspect of the destination, while psychological characteristics (including staff friendliness, safety, popularity, etc.,) related to the intangible aspect (Khalifa & Abou-Shouk, 2014; Qoura & Khalifa, 2016). Moreover, the destination image can also be arranged into ranges from unique to popular features (Abou-Shouk & Khalifa, 2017).

Figure 1: Model of Components of Destination Image

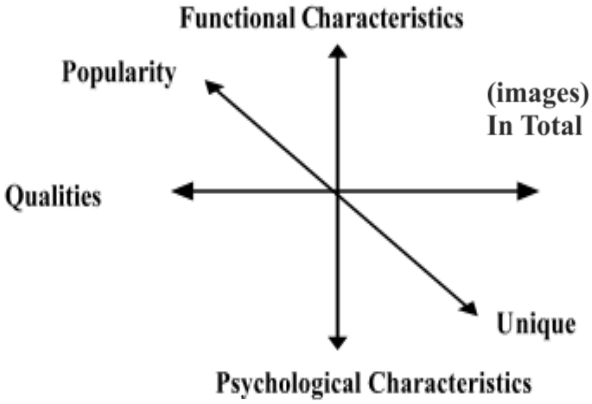

The model shows that all the components of the destination image are interrelated and affected each other. For example, overall impressions can be based on the combination and interaction of qualities, the perception of personal qualities can be influenced by someone's impression and feeling. The overall impression and unique factor have a special influence on the choice of travel destination. If a destination is difficult to classify and differs from other similar destinations, it is almost not chosen in travel decisions (Echtner & Ritchie, 1993).

(B) Intentional Return and Positive Word-Of-Mouth Transmission

Consumers' preferences and needs are varied and constantly changed (Mohamed *et al.*, 2018; Mohamed *et al.*, 2019). Therefore, understanding buying behavior and the intentional return destination of visitors is very important for travel managers (Abou-Shouk & Khalifa, 2017; Agwa, Aziz, & Khalifa, 2018a, 2018b; Badran & Khalifa, 2016 Khalifa, 2015). To maintain competitiveness, travel companies, travel destinations need to design memorable travel programs to attract tourists to visit and visit again (Hussein, Abou-Shouk & Khalifa, 2013; Khalifa, 2018; Khalifa & Abou-Shouk, 2014; Khalifa & Hewedi, 2016; Mohamud *et al.*, 2017). Chen & Tsai (2007) pointed out that tourist behavior included the choice of destination, assessments and future behavioral intentions. The assessments are about travel experiences or perceived values and overall customer satisfaction, while the intention of future behavior indicates that visitors' judgments may be a re-visit the destination and ready to recommend it to others (Morsy, Ahmed & Ali, 2016; Khalifa, 2015; Khalifa &

Fawzy, 2017; Khalifa & EI Hussein, 2017).

Intention is defined as "Predetermined ability to promise an action" (Oliver, 1993, 1999) "buyer prediction of a brand they will buy" (Becker, 1960). Ajzen & Fishbein (1980) suggested that behavioral intent is the best predictor of human behavior, an important indicator of visitor behavior. The study of Gitelson & Crompton, (1984) is the first study to discover the importance of repeating visitor destinations. They find that many destinations trust the importance of re-visiting visitors' destinations.

According to Abd-Elaziz *et al.*, (2015), "Word-of-mouth is the transmission of opinions, thoughts, ideals between two or many individuals without any individual as a marketing source." Or "Word-of-mouth is the act of telling to at least one friend or acquaintance about their (dis)satisfaction" (Khuong & Phuong, 2017). van Doorn *et al.*, (2010) said that word-of-mouth has many benefits. Firstly, word-of-mouth is a reliable communication channel due to the exchange between friends and family; secondly, word-of-mouth is a two-way communication; thirdly, word-of-mouth provides potential customers with descriptions of experiences.

It was realized that there was a positive influence of oral information on destination choice (Molina *et al.*, 2010; Alkutbi *et al.*, 2019; Jalilvand & Heidari, 2017). Introducing destination by word-of-mouth to others is one of the most frequent types of information search for those most interested in tourism (Razzaq, Hall & Prayag, 2016). Word-of-mouth referral is crucial in tourism marketing because they are considered the most reliable, so it is one of the sources of information searched of potential tourists (Abd-Elaziz *et al.*, 2015). Similarly, Jalilvand and Heidari, (2017) also mentioned that return tourists who increase word-of-mouth and referrals will effect on potential tourists.

RESEARCH METHODOLOGY

(A) Overview of the Proposed Research Model

The relationships between constructs hypothesized in the conceptual framework have been adapted from the relevant literature in the subject matter. The figure 2 shows the proposed model that contains destination image and word of mouth to predict re-visit intention. The proposed model examines the relationship between the constructs among hotel customers in Ba Ria-Vung Tau in the Vietnam. The proposed conceptual framework has 9 hypotheses to test.

Figure 2: The Research Model

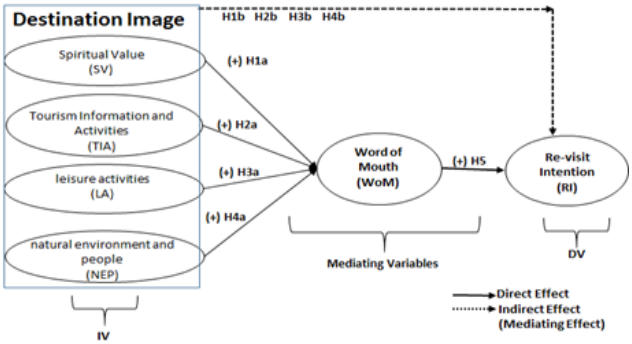

From the research model, hypotheses are set as follows:

H1a: SV is positively related to WoM

H2a: TIA is positively related to WoM

H3a: LA is positively related to WoM

H4a: NEP is positively related to WoM

H5: WoM is positively related to RI

H1b: WoM mediates the relationship between SV and RI

H2b: WoM mediates the relationship between TIA and RI

H3b: WoM mediates the relationship between LA and RI

H4b: WoM mediates the relationship between NEP and RI

(B) Development of Instrument and Data Collection

The development of instrument for this study included a 26-item questionnaire, and based on the destination image and loyalty literature, a multi-item Likert scale was applied (Lee, Yoon & Lee, 2009). Constructs were measured using a Likert scale which recommended in the previous studies (Mohamed *et al.*, 2018, 2019), with 5 being 'Strongly Agree' and 1 being 'Strongly Disagree'. The data was collected by delivering a self-administered questionnaire 'in-person' from July 2018 till December 2018 to Hotel Customers within BR-VT destination. The number of the distributed questionnaires was 500, and the number of the returned sets is 400 of which 356 responses were considered suitable for the analysis. According to Tabachnick & Fidell (2012), the sample size was seen as sufficient. Compared to the relevant literature the 71.2% response rate of this study is considered very good (Baruch & Holtom, 2008).

RESULTS

(A) Respondent Profile

Out of 356 survey forms, sample distribution is shown as follows:

Regarding the purpose of international visitors to BR-VT: Hotel's International tourists to BR-VT mainly for purely tourism purposes, accounted for 79.2%, other purposes such as tourism combined work, visiting relatives, and other purposes accounted for a very small percentage, the all was 20.8%. *About the number of times visitors to BR-VT:* hotel's tourists surveyed mainly to BR-VT for the first time with the rate of 84.3%, this shows very few international tourists to BR-VT for the second times, third times or more.

Regarding the number of days of staying: visitors often stay from 1 to 4 days, while from 1 to 2 days accounted for 45.5% and from 3 to 4 days accounted for 47.2%, over 5 days only accounts for 7.3%. This result showed that the time of international visitors staying at BR-VT is very short. *About sex:* the sex visitors are relatively equal between men and women, with the corresponding rates of 52.2% for men and 48.8% for women. *About ages:* The age of international tourists to BR-VT is mainly under 35 years old. This result is nearly similar with the age statistics of international visitors to Vietnam. Visitors at these ages mainly travel with the purpose of discovery, with rather cheap trips, limited in spending and shopping.

About the continent: The hotel's tourists come from 4 continents, the highest proportion is European tourists, accounted for 43.8% (most of the visitors are English, French, German). Then Asians are with 27.5% (most tourists come from Israel, China, and Korea). Visitors from the Americas accounted for 17.4% (American tourists were the majority). Although Asia is the main international tourist market of Vietnam, from the result of this study, the number of Asian visitors is not high enough.

(B) Measurement Model Assessment

Cronbach's alpha coefficients and composite reliability were used to measure Construct reliability. The results indicate that all individual Cronbach's alpha and CR were higher than the suggested value of 0.7 (Gefen, Straub & Boudreau, 2000; Kannana & Tan, 2005; Kline, 2010; Nunnally & Bernstein, 1994). Factor loading was used to test indicator reliability. The loading for all measurements exceeded the recommended value of 0.5 (Hair *et al.*, 2017). Average variance extracted (AVE) was used to test convergent validity and it indicated that all AVE values were exceeded the suggested value of 0.5 (Hair *et al.*, 2010) (refer to table 1).

Table 1: Construct Reliablity, Convergent Validity and Indicator Validity

Constructs	Item	Loading (> 0.5)	α (> 0.7)	CR (> 0.7)	AVE (> 0.5)
Leisure activities (LA)	LA1 LA2 LA3 LA4	0.794 0.613 0.774 0.682	0.701	0.809	0.518
Natural environment and people (NEP)	NEP1 NEP2 NEP3 NEP4 NEP5 NEP6	0.627 0.627 0.605 0.780 0.673 0.586	0.729	0.815	0.526
Tourism information and activities (TIA)	TIA1 TIA2 TIA3 TIA4 TIA5	0.771 0.596 0.653 0.667 0.679	0.710	0.806	0.556
Spiritual value (SV)	SV1 SV2 SV3 SV4	0.783 0.799 0.644 0.736	0.731	0.830	0.552
Word of Mouth (WoM)	WoM1 WoM2 WoM3	0.755 0.814 0.842	0.729	0.846	0.647
Re-visit Intentions (RI)	RI1 RI2 RI3	0.817 0.834 0.769	0.734	0.848	0.651

Cross loading, Fornell Larcker, and heterotrait monotrait ratio (HTMT) were used to measure discriminant validity (Hair *et al.*, 2017). Cross loading criterion fulfills the requirements because the indicators outer loadings on a construct were higher than all its cross-loadings with other constructs (bold values) (refer to table 2).

Table 2: Cross Loading

		LA	NEP	RI	SV	TIA	WoM
Leisure activities (LA)	**LA1**	**0.794**	-0.053	0.334	0.042	0.127	0.140
	LA2	**0.613**	-0.001	0.255	0.035	0.076	0.054
	LA3	**0.774**	0.054	0.272	0.129	0.029	0.122
	LA4	**0.682**	0.035	0.290	-0.017	0.039	0.094
Natural environment and people (NEP)	**NEP1**	-0.016	**0.627**	0.094	0.215	0.056	0.176
	NEP2	-0.019	**0.627**	0.145	0.293	0.111	0.170
	NEP3	-0.041	**0.605**	0.172	0.294	0.111	0.159
	NEP4	-0.039	**0.780**	0.216	0.308	0.205	0.241
	NEP5	0.145	**0.673**	0.153	0.161	0.124	0.217
	NEP6	-0.023	**0.586**	0.161	0.290	0.096	0.162

Re-visit Intentions (RI)	**RI1**	0.307	0.194	**0.817**	0.427	0.374	0.595
	RI2	0.351	0.218	**0.834**	0.441	0.413	0.586
	RI3	0.309	0.171	**0.769**	0.362	0.401	0.461
Spiritual value (SV)	**SV1**	0.106	0.310	0.490	**0.783**	0.326	0.367
	SV2	0.052	0.240	0.345	**0.799**	0.154	0.326
	SV3	0.012	0.231	0.340	**0.644**	0.170	0.230
	SV4	0.023	0.384	0.323	**0.736**	0.165	0.282
Tourism information and activities (TIA)	**TIA1**	0.064	0.214	0.364	0.227	**0.771**	0.339
	TIA2	0.094	0.038	0.256	0.130	**0.596**	0.144
	TIA3	0.137	0.179	0.330	0.172	**0.653**	0.234
	TIA4	0.078	0.070	0.373	0.216	**0.667**	0.333
	TIA5	-0.032	0.091	0.295	0.178	**0.679**	0.246
Word of Mouth (WoM)	**WoM1**	0.082	0.190	0.495	0.226	0.289	**0.755**
	WoM2	0.121	0.173	0.577	0.323	0.307	**0.814**
	WoM3	0.156	0.326	0.576	0.425	0.379	**0.842**

The results in table 3 and table 4 indicated that Fornell Larcker criterion (Fornell & Larcker,1981; Chin, 1998a, 1998b), and heterotrait-monotrait ratio (HTMT) are fulfilled. Thus, suggesting a good discriminant validity (Hair *et al.*, 2017).

Table 3: Fornell Larcker Criterion

		LA	**NEP**	**RI**	**SV**	**TIA**	**WoM**
Leisure activities	LA	**0.719**					
Natural environment and people	NEP	0.008	**0.653**				
Re-visit Intentions	RI	0.399	0.242	**0.807**			
Spiritual value	SV	0.072	0.391	0.511	**0.743**		
Tourism information and activities	TIA	0.096	0.186	0.489	0.283	**0.675**	
Word of Mouth	WoM	0.152	0.292	0.685	0.413	0.407	**0.805**

Table 4: HTMT Results

		LA	NEP	RI	SV	TIA	WoM
Leisure activities	LA						
Natural environment and people	NEP	0.144					
Re-visit Intentions	RI	0.553	0.327				
Spiritual value	SV	0.132	0.549	0.683			
Tourism information and activities	TIA	0.195	0.281	0.662	0.364		
Word of Mouth	WoM	0.194	0.385	0.723	0.542	0.526	

(C) Structural Model Assessment

Beta (B), r^2, and *t*-values via a bootstrapping with a resample of 5000 were used to assess the structural model (Hair *et al.*, 2017).

Figure 3: PLS Algorithm Results

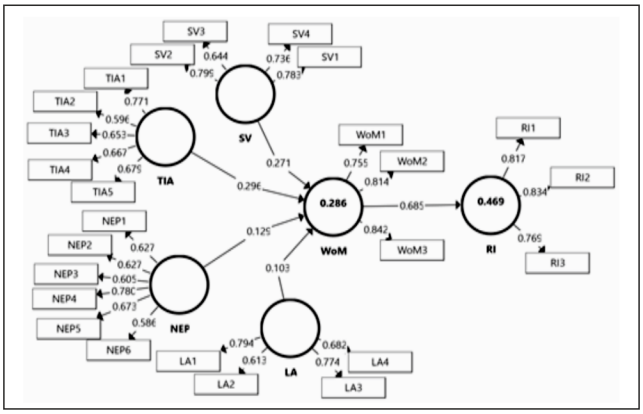

(D) Hypotheses Tests

The results from figure 3 and table 5 showed that, 5 out of 5 direct relationship hypotheses are supported. SV, TIA, LA, and NEP significantly predict WoM, Hence H1a, H2a, H3a, and H4a are accepted with (β = 0.271, t = 5.373, p<0.01), (β = 0.296, t = 7.242, p<0.01), (β = 0.103, t = 2.029, p<0.05), and (β = 0.129, t = 3.166, p<0.001), respectively. In addition, WoM is significantly predict RI. Hence H5 is accepted with (β = 0.685, t = 13.420, p<0.01), SV, TIA, LA, NEP, and WoM are explaining 46.9 % of the variance in RI. The R^2 values achieved an acceptable level of explanatory power as recommended by Cohen (1988) and Chin (1998a, 1998b) indicating a substantial model. The f2 results showed that four relationship with small effect and one relationship with large effect. In addition, all Q2 Values are greater than Zero (Hair *et al.*, 2017).

Table 5: Hypotheses Testing

Hypothesis	Relationship	Std Beta	Std Error	*t*-value	*p*-value	Decision	R^2	f^2	Q^2
H1a	SV -> WoM	0.271	0.050	5.373	0.000	Supported	0.286	0.082	0.168
H2a	TIA -> WoM	0.296	0.041	7.242	0.000	Supported		0.112	
H3a	LA -> WoM	0.103	0.051	2.029	0.043	Supported		0.025	
H4a	NEP -> WoM	0.129	0.041	3.166	0.002	Supported		0.022	
H5	WoM -> RI	0.685	0.051	13.420	0.000	Supported	0.469	0.882	0.287
H1b	SV -> WoM -> RI	0.185	0.039	4.783	0.000	Supported			
H2b	TIA -> WoM -> RI	0.203	0.037	5.480	0.000	Supported			
H3b	LA -> WoM -> RI	0.071	0.037	1.900	0.058	Not-Supported			
H4b	NEP -> WoM -> RI	0.089	0.029	3.086	0.002	Supported			

The results in table 6 showed the mediation test. WoM significantly mediate the relationship between SV, TIS, and NEP from one side and RI on the other side. Hence, H1b, H2b, and H4b are accepted with (β = 0.185, t = 4.783, p<0.01), (β = 0.203, t = 5.480, p<0.01), and (β = 0.089, t = 3.086, p<0.01), respectively. On the other side, H3b is not accepted.

DISCUSSION

According to the proposed model, this study improves the understanding of the role played by destination image factors (DIF) in the international tourists' revisit intentions (RI) at BR-VT in Vietnam, and highlights relevant implications and suggestions for management and policy makers. The discussions are further detailed in the following.

The study found that DIF positively affect RI among tourists within the BR-VT in Vietnam, this is supported by previous studies (Abd-Elaziz *et al.*, 2015; Jalilvand & Heidari, 2017; Khuong & Phuong, 2017). It is explained by the fact that the more the destination factors of the BR-VT is positive, the more WoM is positive, and more likely to achieve optimal quality.

Additionally, All DIF dimentions were found to positively affect WoM among respondents within the BR-VT in Vietnam, this is supported by previous studies (Abd-Elaziz *et al.*, 2015; Jalilvand & Heidari, 2017; Kim, Han & Lee, 2001; van Doorn *et al.*, 2010). It is explained by the fact that the more the destination factors of the BR-VT is positive, the more WoM is positive, and more likely to achieve optimal quality. In order to face the fierce competition within the tourism industry, destination managers need to understand the destination image management because it was recognized as the key for destination competitiveness (Abou-Shouk & Khalifa, 2017; Khalifa & Abou-Shouk, 2014; Khalifa & Fawzy, 2017; Khalifa & Mewad, 2017; Mohamud *et al.*, 2017; Qoura & Khalifa, 2016). The more WoM the tourists becomes, and more likely to re-visit BR-VT.

The connotations among DIF and WOM and EIB have been examined extensively. This study's outcomes offer extra support for these causal relationships, primarily in BR-VT destination, and suggest that DIF is supplementary important issue that indirectly affects this significant destination competitiveness. Similary, the results also revealed that DIF has an indirect effect on RI via WoM, among tourists within BR-VT in the Vietnam, which confirms the mediation role that WoM has in this context. Moreover, the variance explained by the proposed model in the current study for RI among tourits within the BR-VT in the Vietnam is 46.9%. Thus, BR-VT managers who want to foster better RI among tourits within the BR-VT in the Vietnam, should take actions to confirm a more DIF (Tosun, Dedeoğlu & Fyall, 2015). The fact that DIF indirectly affects tourist' re-visit makes the case that BR-VT should define DIF as a vital destination components in the development strategies of BR-VT.

CONCLUSION

The research model examines the direct impact of the destination image factors on positive word-of-mouth and intentional re-visit intention without considering factors of satisfaction. Research results showed that factors including spiritual values, tourism information and activities, leisure activities have a positive impact on the intentional revisit intentions of hotels' international visitors. The factors of natural environment and people, spiritual values, tourism information and activities have a positive impact on the positive word-of-mouth of international visitors.

From the research results, BR-VT needs to focus its tourism management such as identifying markets in Europe, Asia and North America including the countries (England, France, Germany and Israel, China, South Korea, the United States, Canada) where are the target tourist markets so that managers have appropriate tourism development policies. Developing tourism products, and promotional activities need focusing on the aims of young tourists (under 35 years old), and orientation for these tourists in order to remind them to return BR-VT within next 10 years. Besides, the provincial tourism management agencies should focus on ensuring the safety for international visitors when they travel in BR-VT, tourism development planning must ensure the natural environment, keeping preserving BR-VT people's identity such as promoting the peacefulness and hospitality. Training the role of people in community tourism development in the locality is more often. In addition, BR-VT also needs to promote the development of night leisure to serve international tourists.

REFERENCES

Abd-Elaziz, M.E., Aziz, W.M., Khalifa, G.S. & Abdel-Aleem, M. (2015). Determinants of Electronic word of mouth (EWOM) influence on Hotel Customers' Purchasing Decision. *International Journal of Heritage, Tourism, and Hospitality*, 9(2/2), pp 194-223.

Abou-Shouk, M.A. & Khalifa, G.S. (2017). The Influence of Website Quality Dimensions on E-Purchasing Behaviour and E-Loyalty: A Comparative Study of Egyptian Travel Agents and Hotels. *Journal of Travel and Tourism Marketing*, 34(5), pp 608-623.

Agwa, Y., Aziz, W. & Khalifa, G.S.A. (2018a). Evaluating Food and Beverage Courses in Higher Private Tourism and Hotels Institutes in Alexandria: Professionals' Perception. *International Journal of Heritage*, *Tourism, and Hospitality*, 11(2/2), pp 98-110.

Agwa, Y., Aziz, W. & Khalifa, G. (2018b). Evaluating of Food and Beverage Courses in Higher Private Tourism and Hotels Institutes in Alexandria: The Students' Perspective. *International Journal of Heritage*, *Tourism, and Hospitality,* 11(2/2), pp 111-122.

Ajzen, I. & Fishbein, M.A. (1980). *Understanding Attitudes and Predicting Social Behaviour*. 1st Edition. Pearson. US.

Alkhateri, A.S., Abuelhassan, A.E., Khalifa, G.S.A., Nusari, M. & Ameen, A. (2018). The Impact of Perceived Supervisor Support on Employees Turnover Intention: The Mediating Role of Job Satisfaction and Affective Organizational Commitment. *International Business Management*, 12(7), pp 477-492.

Alkutbi, S., Alrajawy, I., Nusari, M., Khalifa, G.S.A. & Abuelhassan, A.E. (2019). Impact of Ease of Use and Usefulness on the Driver Intention to Continue Using Car Navigation Systems in the United Arab Emirates. *International Journal of Management and Human Science*, 3(1), pp 1-9.

Andrades, L. & Dimanche, F. (2017). Destination Competitiveness and Tourism Development in Russia: Issues and Challenges. *Tourism Management*, 62(C), pp 360-376.

Badran, N. & Khalifa, G. (2016). Diversity Management: Is it an Important Issue in Hotel Industry in Egypt? *International Journal of Heritage, Tourism, and Hospitality*, 7(2), pp 275-286.

Baruch, Y. & Holtom, B.C. (2008). Survey Response Rate Levels and Trends in Organizational Research. *Human Relations*, 61(8), pp 1139-1160.

Becker, H.S. (1960). Notes on the Concept of Commitment. *The American Journal of Sociology*, 66(1), pp 32-40.

Blanke, J. & Chiesa, T. (2013). The Travel & Tourism Competitiveness Report 2013. Reducing Barriers to Economic Growth and Job Creation. World Economic Forum. Retrieved From: http:// www3.weforum.org/docs/WEF_TT_Competitiveness_Report_2013.pdf

Chen, C. & Tsai, D. (2007). How Destination Image and Evaluative Factors Affect Behavioral Intentions? *Tourism Management*, 28(4), pp 1115-1122.

Chin, W.W. (1998a). Issues and Opinion on Structural Equation Modeling. *MIS Quarterly*, 22(1), pp 7-16.

Chin, W.W. (1998b). *The Partial Least Squares Approach to Structural Equation Modeling*. Lawrence Erlbaum Associates. US.

Cohen, J. (1988). *Statistical Power Analysis for the Behavioral Sciences*. 2nd Edition. Routledge. UK.

Echtner, C.M. & Ritchie, J.B. (1993). The Measurement of Destination Image: An Empirical Assessment. *Journal of Travel Research*, 31(4), pp 3-13.

Fornell, C. & Larcker, D.F. (1981). Evaluating Structural Equation Models with Unobservable Variables and Measurement Error. *Journal of Marketing Research*, 18(1), pp 39-50.

Gallarza, M.G., Saura, I.G. & García, H.C. (2002). Destination Image: Towards a Conceptual Framework. *Annals of Tourism Research*, 29(1), pp 56-78.

Gefen, D., Straub, D.W. & Boudreau, M. (2000). Structural Equation Modeling and Regression: Guidelines for Research Practice. *Communications of the Association for Information Systems*, 4(7), pp 2-77.

Gitelson, R.J. & Crompton, J.L. (1984). Insights into the Repeat Vacation Phenomenon. *Annals of Tourism Research*, 11(2), pp 199-217.

Hair, J.F., Black, W.C., Babin, B.J., Anderson, R.E. & Tatham, R. (2010). *Multivariate Data Analysis*. 7th Edition. Prentice Hall. US.

Hair, J.F., Hult, G.T.M., Ringle, C.M. & Sarstedt, M. (2017). *A Primer on Partial Least Squares Structural Equation Modeling (PLS-SEM)*. 2nd Edition. Thousand Oaks: Sage. US.

Högström, C., Rosner, M. & Gustafsson, A. (2010). How to Create Attractive and Unique Customer Experiences: An Application of Kano's Theory of Attractive Quality to Recreational Tourism. *Marketing Intelligence & Planning*, 28(4), pp 385-402.

Hussein, I.E., Abou-Shouk, M. & Khalifa, G.S.A. (2013). Evaluating Tourism and Hospitality Graduates: Perceptions of Stakeholders in Egypt. In Proceedings of the 3rd Regional Conference on Tourism Research, 29-31 Oct 2013, Langkawi, Malaysia (pp. 764–774).

Jalilvand, M.R. & Heidari, A. (2017). Comparing face-to-face and electronic word-of-mouth in destination image formation: The case of Iran. Information Technology & People, 30(4), pp 710-735.

Kannan, V.R. & Tan, K.C. (2005). Just in Time, Total Quality Management, and Supply Chain Management: Understanding their Linkages and Impact on Business Performance. *Omega*: *The International Journal of Management Science*, 33(2), pp 153-162.

Khalifa, G.S.A. & Fawzy, N.M. (2017). Measuring E-Service Quality (Expectation Vs. Perception) From Travel Agencies' Perspective: An Empirical Study on Egyptian Hotel Websites. *International Journal on Recent Trends in Business and Tourism (IJRTBT)*, 1(3), pp 36-48.

Khalifa, G.S.A. & Hewedi, M.M. (2016). Factors Affecting Hotel Website Purchasing Intentions: Evidence from Egypt. *Journal of Faculty of Tourism and Hotels*, 8(2), pp 50-69.

Khalifa, G.S.A. (2015). Ethnic Restaurants' Meal Experience: Egyptian Customers' Perceptions. *International Journal of Heritage, Tourism, and Hospitality*, 9(1), pp 92-112.

Khalifa, G.S.A. (2018). The Egyptian Hotels, Where in the Competitive Environment? Competitive Strategies and Market Orientation and its Impact on Customer Loyalty: The Mediating Role of Operational Performance. *International Journal of Management and Human Science (IJMHS)*, 2(4), pp 60-72.

Khalifa, G.S.A. & Abou-Shouk, M.A.A. (2014). Investigating the Success Factors of Hotel Websites: The Case of Egyptian Hotels. *Asia-Pacific Journal of Innovation in Hospitality and Tourism (APJIHT)*, 3(2), pp 131-151.

Khalifa, G.S.A. & Mewad, E.-H.A. (2017). Managing Drivers and Boundaries of Information Technology Risk Management (ITRM) to Increase Egyptian Hotels Market Share. *International Journal on Recent Trends in Business and Tourism (IJRTBT)*, 1(1), pp 12-31.

Khuong, M.N. & Phuong, N.T. (2017). The Effects of Destination Image, Perceived Value, and Service Quality on Tourist Satisfaction and Word-of-Mouth - A Study in Ho Chi Minh City, Vietnam. *International Journal of Trade, Economics and Finance*, 8(5), pp 217-224.

Kim, W.G., Han, J.S. & Lee, E. (2001). Effects of Relationship Marketing on Repeat Purchase and Word-of-Mouth. *Journal of Hospitality & Tourism Research*, 25(3), pp 272-288.

Kline, R.B. (2010). *Principles and Practice of Structural Equation Modeling*. 3rd Edition. The Guilford Press. US.

Lee, B.C., Yoon, J.O. & Lee, I. (2009). Learners'

Acceptance of e-learning in South Korea: Theories and Results. *Computers and Education*, 53(4), pp 1320-1329.

Marinao, E., Vilches-Montero, S. & Chasco, C. (2015). Antecedents of Tourism Destination Reputation: The Mediating Role of Familiarity. *Journal of Retailing and Consumer Services*, 26(2015), pp 147-152.

Mohamed, M.S., Khalifa, G.S.A., Al-Shibami, A.H., Alrajawi, I. & Isaac, O. (2019). The Mediation Effect of Innovation on the Relationship between Creativity and Organizational Productivity: An Empirical Study within Public Sector Organizations in the UAE. *Journal of Engineering and Applied Sciences*, 14(10), pp 3234–3242.

Mohamed, M.S., Khalifa, G.S.A., Nusari, M., Ameen, A., Al-Shibami, A.H. & Abu-Elhassan, A.E. (2018). Effect of Organizational Excellence and Employee Performance on Organizational Productivity Within Healthcare Sector in the UAE. *Journal of Engineering and Applied Sciences*, 13(15), pp 6199-6210.

Mohamud, S.S., Khalifa, G.S., Abuelhassan, A.E., & Kaliyamoorthy, S. (2017). Investigating the Antecedents of Coffee Shop Customers' Behavioral Intentions in Kuala Lumpur. *International Journal on Recent Trends in Business and Tourism (IJRTBT)*, 1(4), pp 1-14.

Molina, A., Rico, M.G. & Navarro, D.M. (2010). Tourism Marketing Information and Destination Image Management. *African Journal of Business Management*, 4(5), pp 722-728.

Morsy, M.A., Ahmed, G.S. & Ali, N.A. (2016). Impact of Effective Training on Employee Performance in Hotel Establishments. *International Journal of Heritage, Tourism, and Hospitality*, 10(1/2), pp 92-109.

Nhu, D.Q., Khang, N.T.N. & Thảo, N.C.T. (2014). ĐÁNH GIÁ MỐI QUAN HỆ GIỮA MỨC ĐỘ HÀI LÒNG VÀ DỰ ĐỊNH HÀNH VI CỦA DU KHÁCH QUỐC TẾ KHI ĐẾN CẦN THƠ. *Tạp Chí Khoa Học Trường Đại Học Cần Thơ*, 32(2014), pp 76-84.

Nunnally, J.C. & Bernstein, I.H. (1994). *Psychometric Theory*. 3rd Edition. McGraw-Hill. US.

Nusari, M., Al Falasi, M., Alrajawy, I., Khalifa, G.S. & Isaac, O. (2018). The Impact of Project Management Assets and Organizational Culture on Employee Performance. *International Journal of Management and Human Science (IJMHS)*, 2(3), pp 15-26.

Oliver, R.L. (1999). Whence Consumer Loyalty? *Journal of Marketing*, 63(4), pp 33-44.

Oliver, R.L. (1993). Cognitive, Affective, and Attribute Bases of the Satisfaction Response. *Journal of Consumer Research*, 20(3), pp 418-430.

Qoura, O. & Khalifa, G.S. (2016). The Impact of Reputation Management on Hotel Image among Internal Customers: The Case of Egyptian Hotels. *International Journal of Heritage, Tourism and Hospitality*, 7(2), pp 261-274.

Qu, H., Kim, L.H. & Im, H.H. (2011). A Model of Destination Branding: Integrating the Concepts of the Branding and Destination Image. *Tourism Management*, 32(3), pp 465-476.

Razzaq, S., Hall, C.M. & Prayag, G. (2016). The Capacity of New Zealand to Accommodate the Halal Tourism Market - Or not. *Tourism Management Perspectives*, 18, pp 92-97.

Shamsi, R.S.H.A., Ameen, A.A., Isaac, O., Al-Shibami, A.H. & Khalifa, G.S. (2018). The Impact of Innovation and Smart Government on Happiness: Proposing Conceptual Framework. *International Journal of Management and Human Science (IJMHS)*, 2(2), pp 10-26.

Som, A.P.M., Marzuki, A., Yousefi, M. & AbuKhalifeh, A.N. (2012). Factors Influencing Visitors' Revisit Behavioral Intentions: A Case Study of Sabah, Malaysia. *International Journal of Marketing Studies*, 4(4), pp 39-50.

Sudigdo, A., Khalifa, G.S. & Abuelhassan, A.E. (2019). Driving Islamic Attributes, Destination Security Guarantee & Destination Image to Predict Tourists' Decision to Visit Jakarta. *International Journal on Recent Trends in Business and Tourism*, 3(1), pp 59-65.

Tabachnick, B.G. & Fidell, L.S. (2012). *Using Multivariate Statistics*. 6th Edition. Pearson. US.

Tavitiyaman, P. & Qu, H. (2013). Destination Image and Behavior Intention of Travelers to Thailand: The Moderating Effect of Perceived Risk. *Journal of Travel & Tourism Marketing*, 30(3), pp 169-185.

Tosun, C., Dedeoğlu, B.B. & Fyall, A. (2015). Destination Service Quality, Affective Image and

Revisit Intention: The Moderating Role of Past Experience. *Journal of Destination Marketing and Management*, 4(4), pp 222-234.

Tựu, H.H. & Cẩm, T.T.Á. (2012). Ý định quay lại và truyền miệng tích cực của du khách quốc tế đối với Nha Trang. *Tạp Chí Phát Triển Kinh Tế*, 262(2012), pp 55-61.

Upadhyaya, M. (2012). Influence of Destination Image and Destination Personality: An Empirical Analysis. *Journal of Marketing & Communication*, 7(3), pp 40-47.

van Doorn, J., Lemon, K.N., Mittal, V., Nass, S., Pick, D., Pirner, P. & Verhoef, P.C. (2010). Customer Engagement Behavior: Theoretical Foundations and Research Directions. *Journal of Service Research*, 13(3), pp 253-266.

World Tourism Organization. (2014). Annual Report 2014. World Tourism Organization (UNWTO), Madrid, Spain. Retrieved From: http://cf.cdn.unwto.org/sites/all/files/pdf/unwto_annual_report_2014.pdf